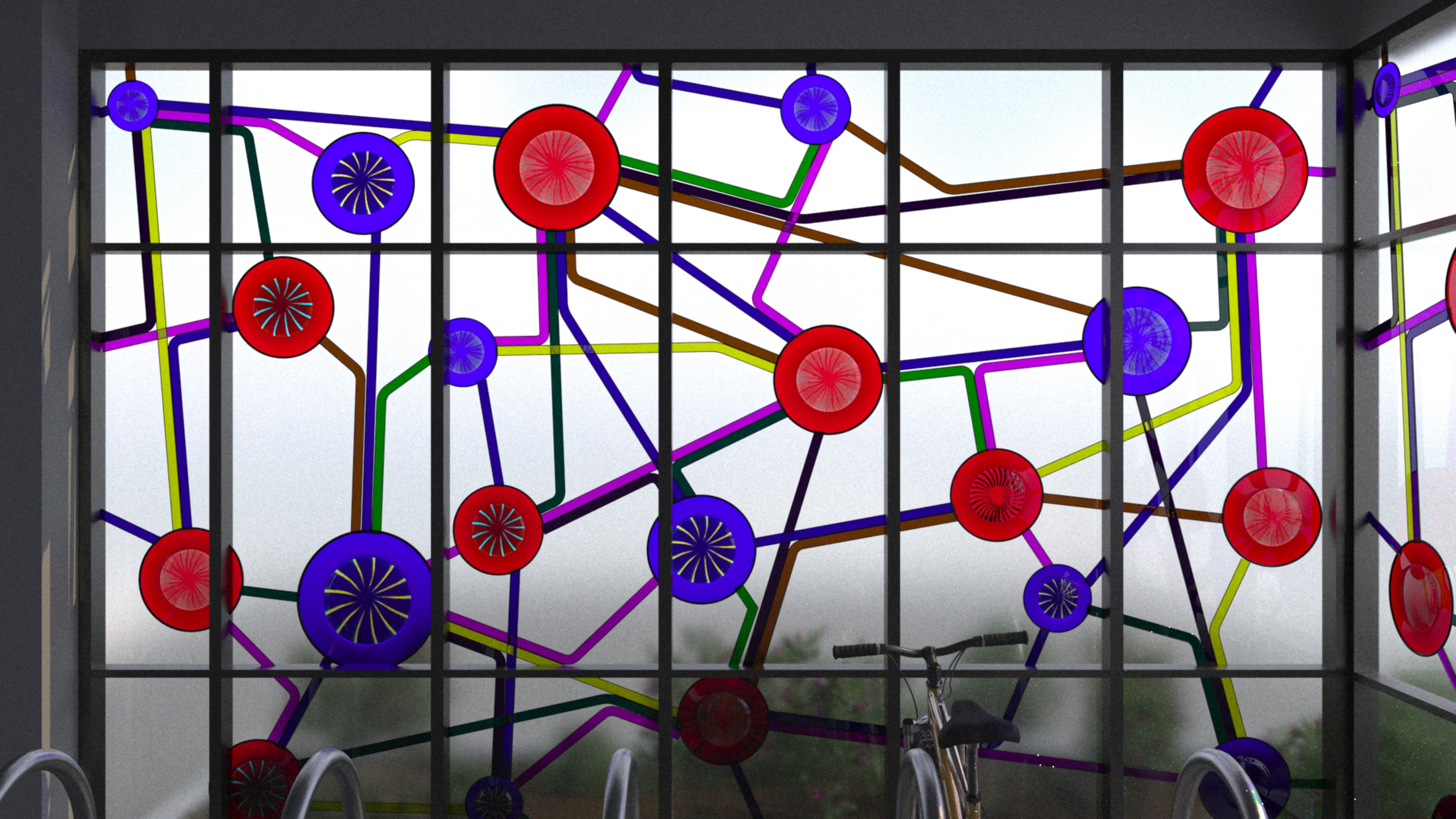

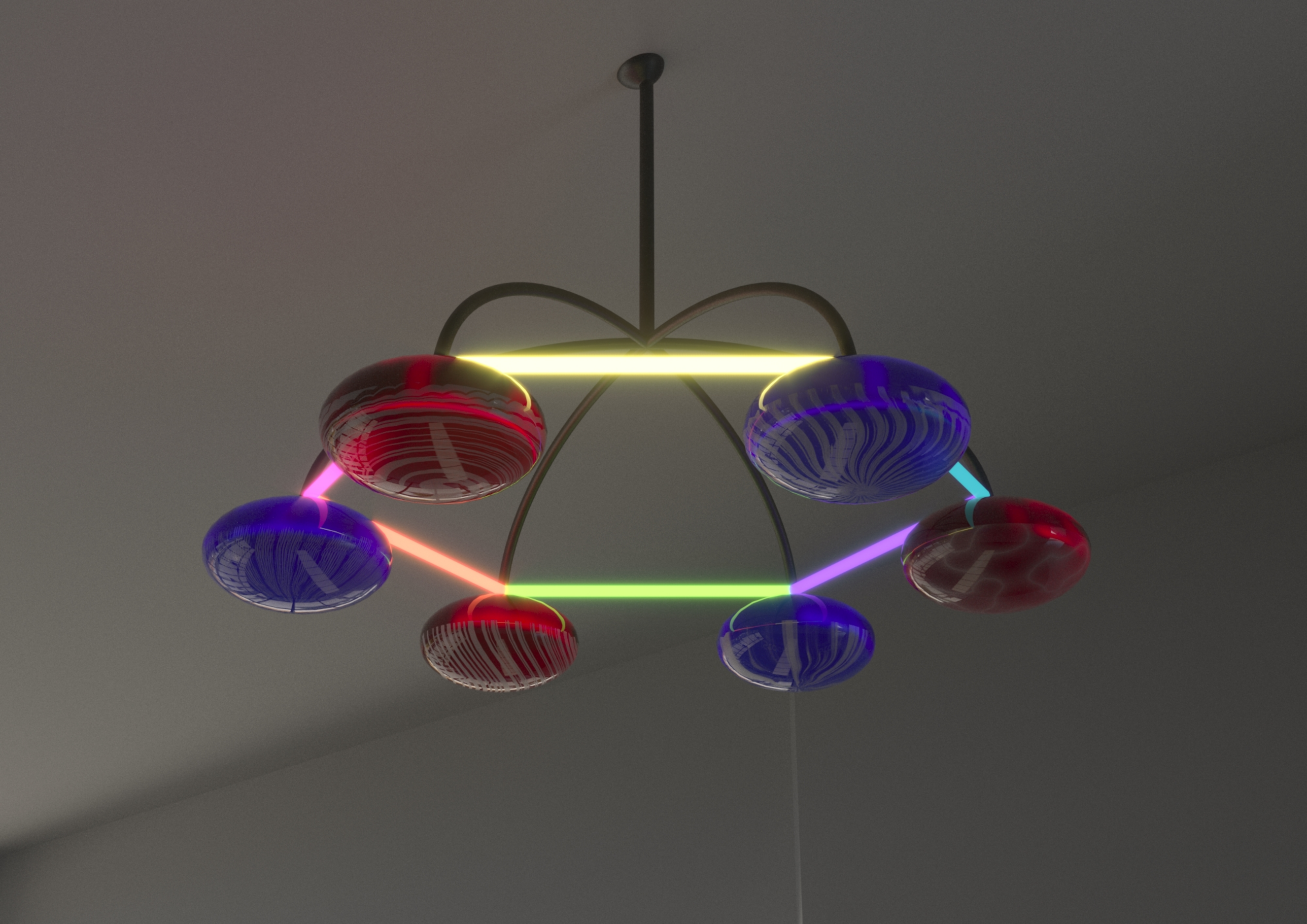

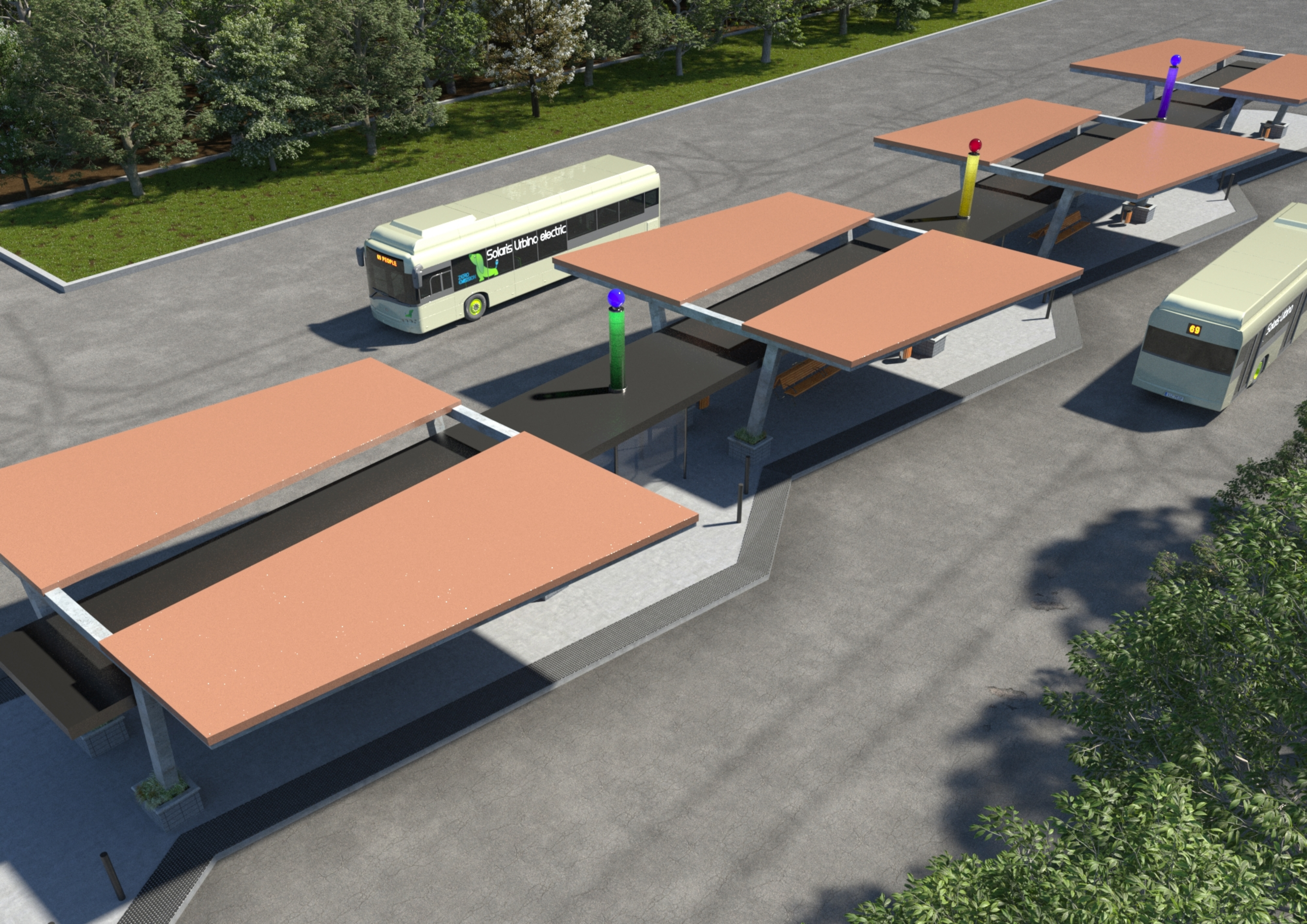
Solaris Urbino electric
ZERO EMISSION
69

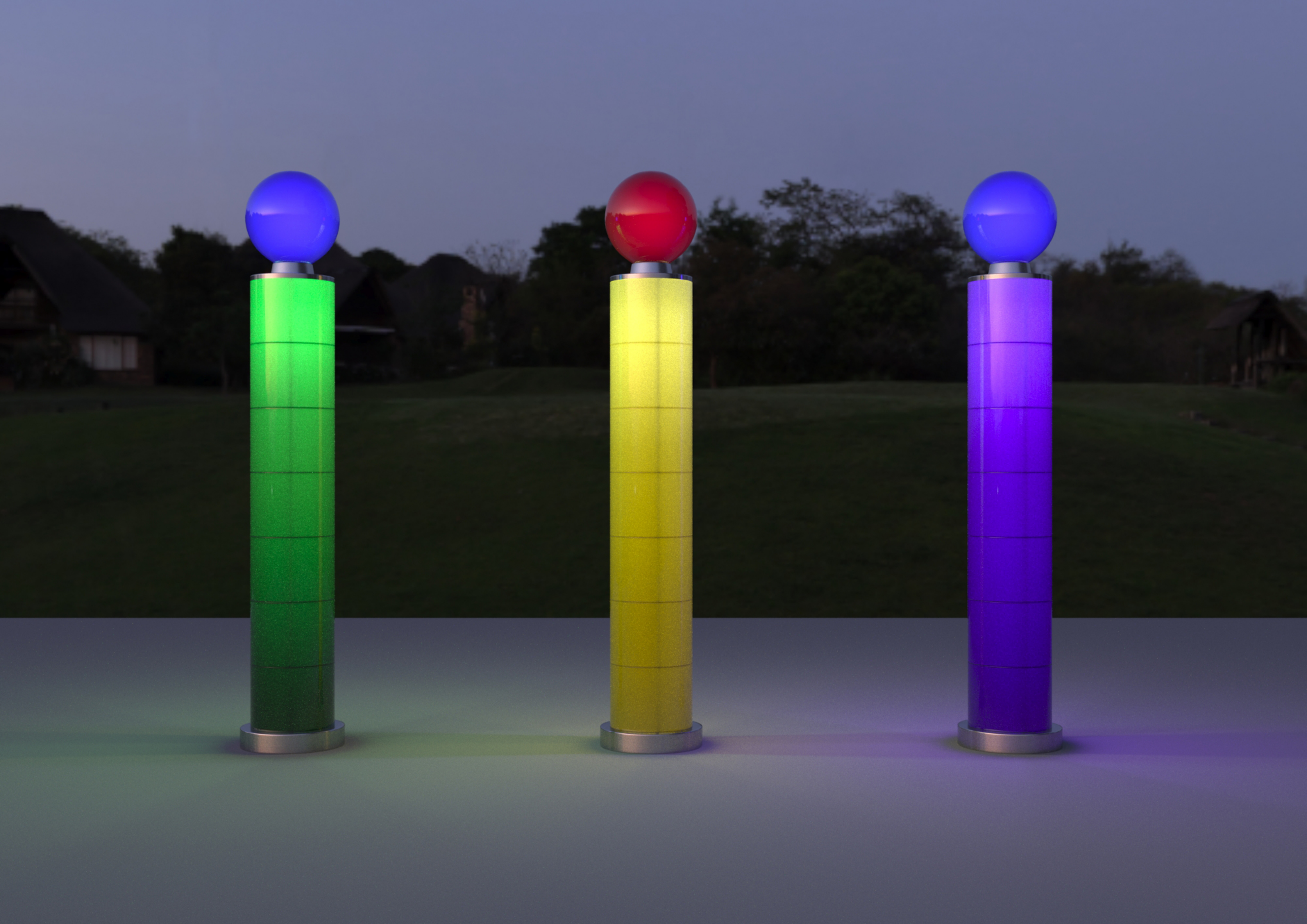

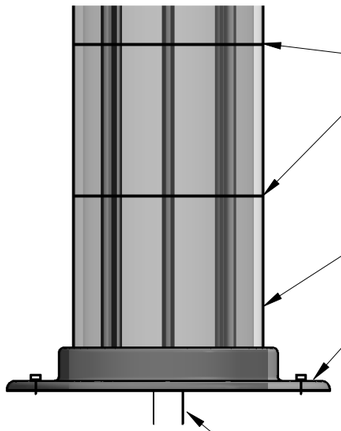

SECTION 1

SECTION 3

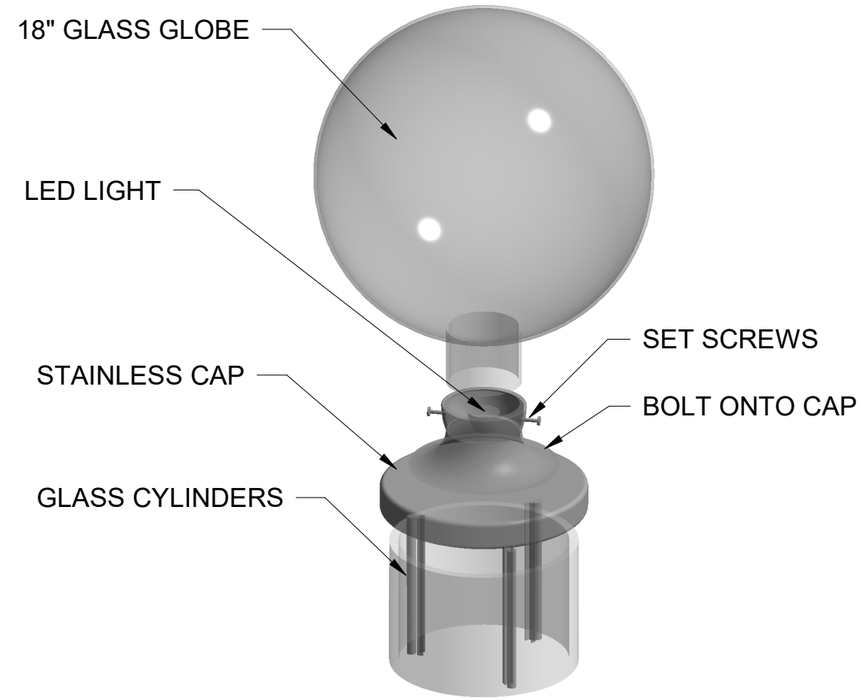

LIT TOWER TOP

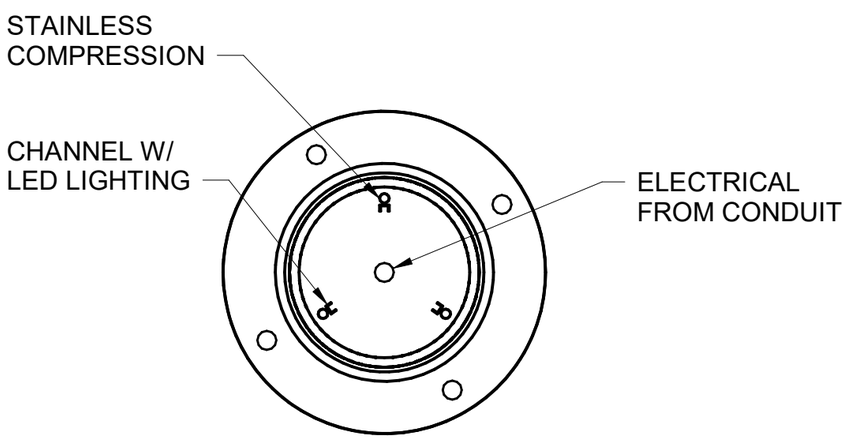

INSIDE TOWER

MONARCH
Glass Studio

LIT TOWER

SHEET: 1 OF 1

SCALE: NOT TO SCALE