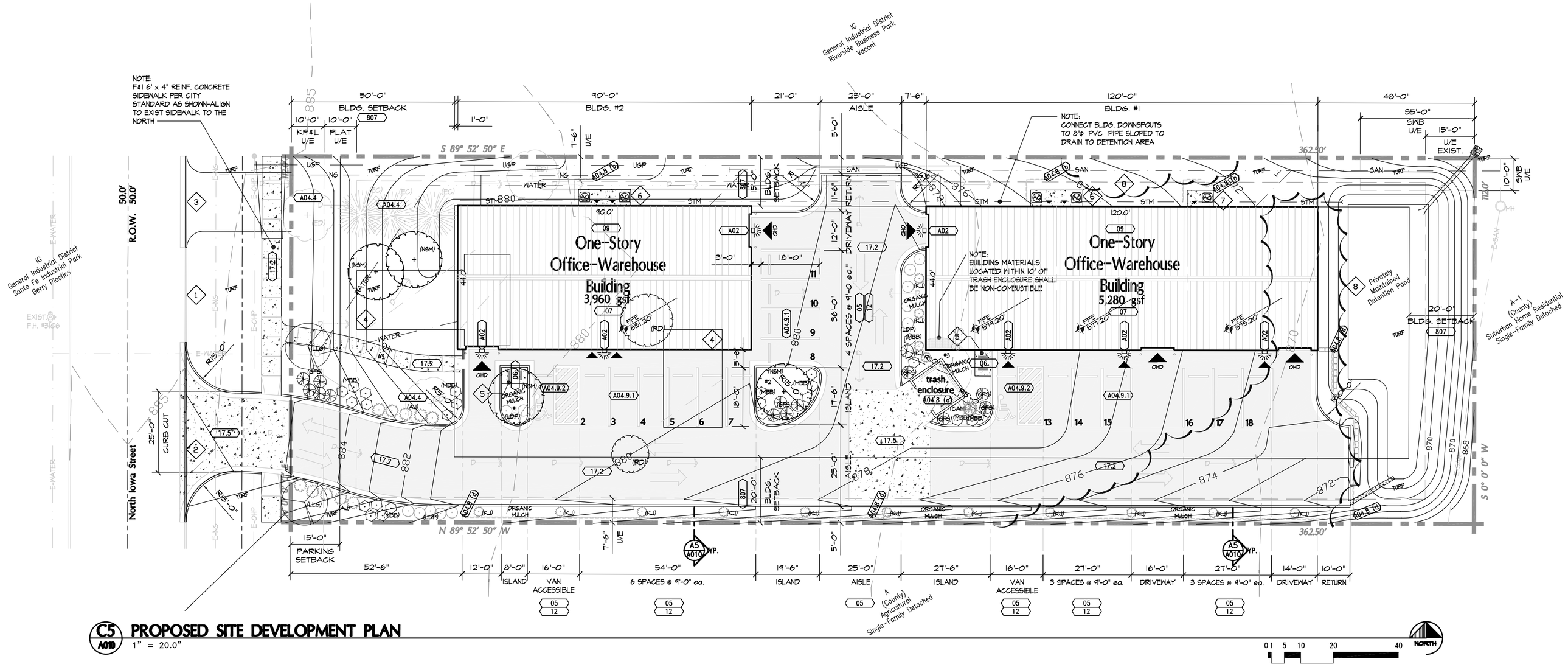

C5 PROPOSED SITE DEVELOPMENT PLAN
A010 1" = 20.0"

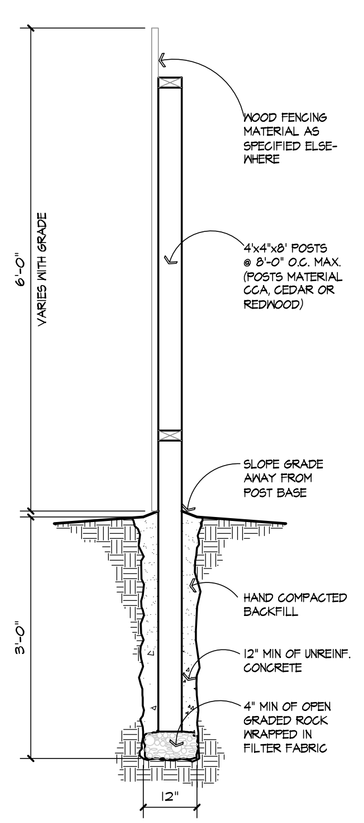

A5 SCREEN FENCE DETAIL
A010 3/4" = 1'-0"

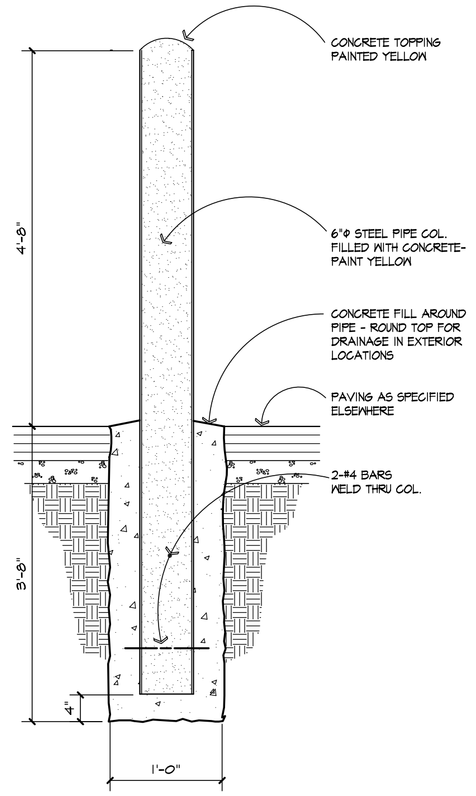

A4 TYPICAL BOLLARD DETAIL
A010 3/4" = 1'-0"

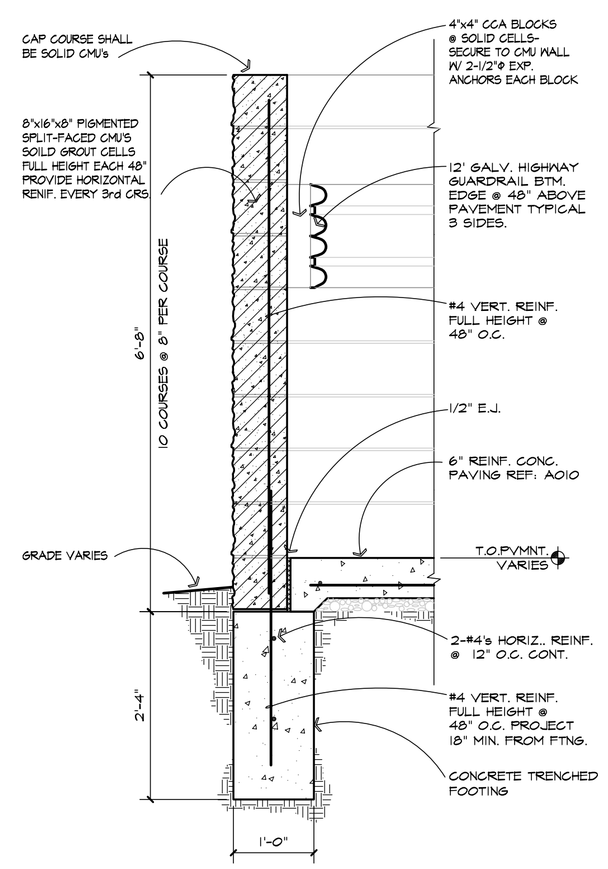

A3 TRASH ENCLOSURE DETAIL
A010 3/4" = 1'-0"

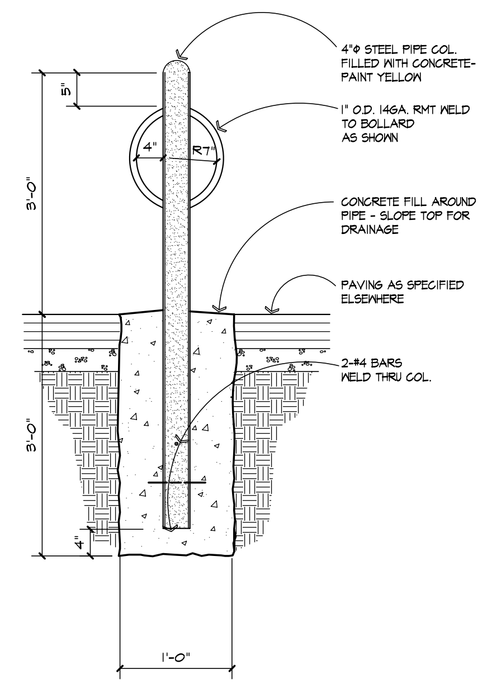

A2 TYPICAL BIKE RACK
A010 3/4" = 1'-0"

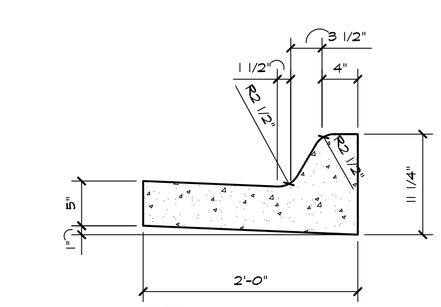

NOTES:
(1) ONLY CLASS 'A' AIR ENTRAINED CONCRETE SHALL BE USED FOR ALL CURB & GUTTER.
(2) FURNISH & INSTALL 3/4" PREMOLDED NON-EXTRUDED BITUMINOUS EXPANSION JOINT FILLERS AT THE END OF CURB RETURNS & IN STRAIGHT RUNS NOT TO EXCEED 100' ON CENTER.
(3) CONTRACTION JOINTS SHALL BE SPACED AT 10' INTERVALS. TOOLED JOINTS SHALL BE ALLOWED IF PROPER DEPTH IS ATTAINED.

A1 TYPE I CURB & GUTTER
A010 1" = 1'-0"

Legal Description

Lot 1 Joyce Addition, a tract of land located in the NW 1/4 of Section 24, Township 12, South Range 19 East, of the 6th Principle Meridian, in the City of Lawrence, Douglas County, Kansas containing +/- 0.833 acres.

Zoning Requirements & Compliance

807 20-807 DISTRICT STANDARDS/TABLE V

	Required	As Shown
Zoning	*M-2 General Industrial	*M-2 General Industrial
Lot Area	5,000sf	40,600sf
Lot Width	50'	112.00'
Lot Depth	100'	362.50'
Minimum Yards		
Front/Across From Non-RS & Across From Major Arterial	50'	50'
Rear/Abutting RS	20'*	20'*
Interior/Abutting RS	15'*	15'*
Interior/Abutting Non-RS	15'*	15'*
Parking	15'	15'
Stories	3	1
Height	35'	16'

*NOTE: M-2 will change to IG in the new Land Development Code to be adopted on July 1, 2006

09 20-709 ALLOWED USE/TABLE IV

20-809 M-2 GENERAL INDUSTRIAL DISTRICT
20-809.8 Use Group 14. RETAIL-WHOLESALE SALES AND SERVICE
1. Contractor or construction offices and shops

9A 20-9A FLOODPLAIN & STORMWATER MANAGEMENT

Impervious Surfaces	Existing	After Project Completion
Total Buildings	1,526 GSF	9,240 GSF
Total Pavement	0 GSF	16,063 GSF
Total Impervious	1,526 GSF	25,303 GSF
Total Pervious	39,074 GSF	15,297 GSF
Property Area	40,600 GSF	40,600 GSF

= direction of storm water run-off

05 20-1205 OFF-STREET LOADING & PARKING REQUIREMENTS

SIZE
(a) Standard Car & Truck Requirements
Angle Stall Depth Aisle
90 18' 25'
(b) Compact Car & Truck Requirements
Angle Stall Depth Aisle
90 16.5' 25'
(c) Standard car minimum width: 9.0'
Compact car minimum width: 7.5'
(d) Minimum width one-way aisle: 12.0'
(e) Minimum width two-way aisle: 25.0'
(f) Minimum accessible parking spaces
Total Spaces — Minimum Required
1-25 — 1
(g) Minimum standards for driveway entrances to parking areas
(1) Thirty foot maximum driveway width
(2) The curb radius return shall not extend beyond the property line.
(3) Driveway curb cuts along major arterial streets shall not be allowed closer than 30 feet between throats of the drives.

06 20-1206 BICYCLE PARKING AREA

Each bicycle parking space shall provide for a secure method of locking a bicycle....
A minimum of 5 bicycle parking spaces shall be provided. (Ref: Detail A2/A010 this sheet)

07 20-1207 FLOOR AREA DEFINED

Building Public Accessible	2,775 gsf
Building Non-Public Accessible	6,465 gsf
Area Applied to Required Parking	2,775 gsf

12 20-1212 OFF-STREET PARKING SPACES REQUIRED

Parking Group 15: 1 space for each 500 sf of floor area = 6 required (1 must be accessible)

Provided:	
Full Size	16
Compact	0
Universal Accessible	2
Total Provided:	18

15 20-1215 MARKINGS & BARRIERS

The perimeter of the parking lot shall be curbed as per Detail A1/A010

17 20-1217 SURFACING

(a) All off-street parking areas shall be surfaced in accordance with City Standards as follows:
17.1 (1) Four (4) inches of 4000 psi concrete reinforced with 6x6, W1.4 x W1.4 WWF.
(.1) Existing 4" reinforced concrete to remain to extent shown
17.2 (2) Five (5) inches of granular rock base with two (2) inches of asphalt overlay per City Standards.
(.1) Existing asphalt paving to remain to extent shown
(3) Five (5) inches of full depth asphaltic concrete over existing prepared grade per City Standards.
(.1) Existing asphalt paving to remain to extent shown
(4) Five (5) inches of 4000 psi concrete reinforced with 6X6, W2.9X2.9 WWF per City Standard
(.1) Existing 5" reinforced concrete to remain to extent shown
17.5 (5) Six (6) inches of 4000 psi concrete reinforced with 6X6, W2.9X2.9 WWF per City Standard

A02 20-14A02 PHOTOMETRIC PLAN

Outdoor lighting fixtures shown thus ⊗ = 175W H.I.D. Wall Pak Wall. The above type fixtures are exempt from photmetric plan requirements.
Outdoor/security lighting shall be restricted to wall mount units as shown & shall be shielded to prevent off-site glare. Pole mounted lighting shall be prohibited prior to submission & approval of a revised site plan including photometrics for revised lighting.

A04.2 20-14A04.2 LANDSCAPING REQUIRED

Symbol	Name	Size	Quantity	Package
NSM	Norweglan Sunset Maple	2" caliper	2	b&b
LLG	Littleleaf Linden 'Greenspire'	2" caliper	2	b&b
CAM	Clump Amur Maple	6'-7' multi-stem	1	b&b
EC	Existing Coniferous To Remain	16" - 20"ø	3	n/a
ED	Existing Deciduous To Remain	20" - 24"ø	3	n/a
RD	Existing Deciduous To Be Removed			
AJ	Arcadia Juniper	3 gal.	10	container
KJ	Keteleeri Juniper	4-5 ft.	15	b&b
MRB	Mentor Barberry	3 gal.	24	container
GFS	Goldflame Spirea	3 gal.	14	container
LDP	Low Dense Privet	3 gal.	13	container

A04.3 20-14A04.3 MINIMUM TREE REQUIREMENTS

Street Trees
Street Frontage: 112'-40'= 2.8 (3) trees provided (1 existing & 2 new)
(a) 15,297 GSF - 4,000 sf = 3.82 (4) trees required
Open Space Factor (4) trees provided (2 existing & 2 new)

A04.4 20-14A04.4 PROTECTION OF PRESERVED TREES

Existing tree shall be protected & preserved during construction including roots & existing grade within the dripline.
If tree is damaged or destroyed during construction then replacement shall be required.

A04.6 20-14A04.6 PLANTING REQUIREMENTS WITHIN PARKING AREAS

REQUIRED: 18 spaces x 280sf per space x 15% = 756 sf
PROVIDED: (Area #1/93sf) + (Area #2/288sf) + (Area #3/540sf) = 921 sf

A04.7 20-14A04.7 SCREENING OF OUTDOOR STORAGE & LOADING AREAS

No outdoor storage areas are proposed

A04.8 20-14A04.8 SCREENING REQUIREMENTS

A04.8 (a) (a) Trash enclosure shall be screened with a CMU wall per detail A3/A010 & in accordance with Sanitation Dept. Standards for enclosures.
A04.8 (b) (b) Ground mounted mechanical & utility equipment shall be screened from view with three foot high cedar fence.
A04.8 (d) (d) All off-street parking areas containing 5 or more vehicles shall be effectively screened on each side that joins or is across the street from any residential district. See Detail A5/A010

A04.9 20-14A04.9 MARKINGS & BARRIERS

A04.9.1 .1 Provide 6" wide (min.) yellow or white stripes on pavement defining each parking stall as shown.
A04.9.2 .2 Accessible spaces shall be designated reserved by stencil on paving surface and by a sign mounted 60"-72" above paving surface. Stencil & sign shall both incorporate the symbol of accessibility as defined in 4.30.7 of the ADA Accessibility Guidelines for Buildings & Facilities.

Disclaimers & Keynotes

Americans With Disabilities Act Compliance
This project has been designed to comply with the ADA Act Accessibility Guidelines for Buildings & Facilities (ADAAG). The Architect has used reasonable professional efforts to interpret & comply with applicable ADAAG requirements as they relate to this document. However, since the requirements of the ADAAG are subject to various and possibly contra-dictory interpretations, the Architect cannont and does not warrent or guarantee that this document will comply with all interpretations that may occur and revisions may be required to comply with those interpretations.

Utilities
The utility locations/sizes/types shown on this document are for general reference only. The Owner or Owner's agent shall be responsible for contacting the utility location service(s) for exact locations/sizes/types.

Stormwater Pollution Prevention Plan
Per City Code Section 9-903(B), a storm water pollution prevention plan (SWP3) must be provided for this project. This project will not be released for building permits until an approved SWP3 has been obtained. Construction activity, including soil disturbance or removal of vegetation shall not commence until an approved SWP3 has been obtained.

1 Existing concrete curb & gutter to remain as shown.
2 Existing curb & gutter to be removed.
3 Close existing curb cut with concrete curb & gutter per City Standard.
4 Existing structure to be removed.
5 Furnish & install 4" x 6' x 6' min. concrete bicycle parking pad, reinforced with W1.4xW1.4, 6x6 WWF.
6 Furnish & install 4" x 16' x 4' min. concrete stoop, reinforced with W1.4xW1.4, 6x6 WWF.
7 Furnish & install 4" x 8' x 4' min. concrete stoop, reinforced with W1.4xW1.4, 6x6 WWF.
8 Existing trees to be removed.

Allen Belot Architect
Architects & Planners
708 West 9th Street Suite 205
Lawrence, KS 66044
Voice 785.843.4670 / Fax 843.4842

COPYRIGHT 2007
All drawn and written information duplicated disclosed or otherwise appearing herein shall not be used without written consent of Allen Belot Architect

JOYCE CONSTRUCTION CORP
Proposed Site Development Plan
908 North Iowa Street Lawrence, Kansas

PROJECT # 0415
DATE: 06.13.06
DRAWN BY:
CHECKED BY:
REVISIONS: 12.07.06
06.13.07

SITE DEVELOPMENT PLAN

Sheet
A010

1 of 1 Sheets